DEKON

DEKON

Ningbo Dekon Refrigeration Equipment Co., Ltd
Add: F4,Fanya Center 18#,No.636 East Duantang Road,
Haishu district,Ningbo,China Post Code:315012
TEL: +86-574-88152763 Cell:0086-15356475680
E-mail: dekon@dekon-hvac.com
www.dekon-china.com

Modular Air Handling Unit

Ningbo Dekon Refrigeration Equipment Co., Ltd, a large-scale industry and trade integrated company , is one of the leading manufacture and supplier for air conditioner products and ventilation systems in China. Products focus on air cooled or water cooled chiller; air handling units; water fan coil units; VRF air conditioner; light commercial air conditioner and special function industrial air conditioner.

Designing and manufacturing a wide range of A/C and ventilation products, we can supply models for use in residential apartments, houses, commercial buildings, hotels, shopping malls and public venues. Marketing all series under our proprietary brand "DEKON" , we can also complete ODM and OEM orders as per customers' requirements.

DEKON strives for better air in your home, hotel, shopping Center and office buildings. And our aim is to supply our air conditioner product to each corner of the world !

DEKON

Product Introduction

Dekon patented air handing unit structure with tenon and double pillar is our new most innovative air handing unit (AHU) product that is specially designed as a solution to overcome various kind of AHU weakness in the market. All metal elements in the cabinet are isolated by the PU foaming and the new designed rubber rib seal whose function is to eliminate thermal bridge. The structural and inner outer plate with the high density polyurethane foam form an entirety, the two structural have tightened together by bolts& nuts fastening and then sealed up with a rubber seal, had given a good air leakage solution of the unit, air leakage only 0.16%. The panel side frame patented design structure, connected by tenon and double pillar which ensure the support strength of the cabinet. Dekon patented frame air handing unit possess complete function and has easy and flexible sections combination, air volume ranged from 1000~300000m^3/h. It is widely applied in hotel,stadium, exhibition hall, office, metro, air port and etc. It is also specially designed for medicine, electronic, textile, tobacco, food industry and chemicals application project.

Nomenclature

KZS – 21 18 D H 06 L – 2

- Heating Coil Rows
- Coil Header Connection (L- Left, R-Right)
- Cooling Coil Rows
- Structure Type: H- Horizontal, V- Vertical, C- Ceiling
- Design Version
- Unit Height Module
- Unit Width Module
- Dekon Modular Air Handing Unit
  KZE- 25mm Thickness Panel; KZS- 35mm Thickness Panel;
  KZW- 50mm Thickness Panel

Left/ Right Model Determination

Face the air intake opening, if the pipe connection and service panel are on the left side, the unit will be considered as left connection, and vice versa.

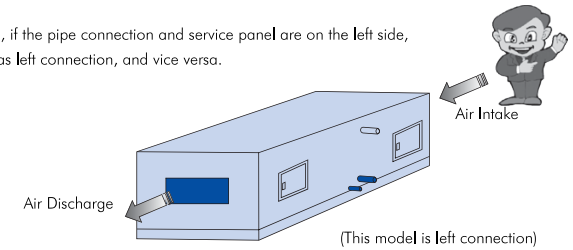

(This model is left connection)

Product Features

High Efficiency and Energy Saving

◆ **Patent Tenon and Double Pillar Design for Casing**

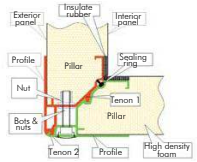

● Super high strength

Board and profile form pillar after foaming; the boards are connected by tenon and bolts and nuts, hence, it can withstand large tensile strength and shear stress; the stuff of the board is the high density polyurethane foam (50kg/m³) to ensure enough strength

● Low air leakage

The boards are connected in 45° triangle, jointed by tenon and seal ring to form a hermetic structure, and also be fixed by bolts further to ensure a low air leakage rate.

National test center air leakage test report showed that the air leakage is only 0.16%.

● Proof cold bridge

The boards are designed as tenon and double pillar structure+ thermal insulate rubber structure that totally separates the inner board and outer metal. Inner stuff is the high density polyurethane foam to avoid cold bridge absolutely.

National test center air leakage test report showed that the cold bridge factor reached TB2 (European standard); heat transfer factor reached T2 (European standard).

◆ **Multi High Efficient Heat Recovery Device**

● Heat wheel heat recovery

It has sensible heat recovery and total heat recovery; exhaust air and fresh air go crossed and upstream through the heat recovery equipment; the heat recovery efficiency can reach 60~90%.

● Plate heat recovery

It has sensible heat recovery and total heat recovery; exhaust air and fresh air go crossed and upstream through the heat recovery equipment; the heat recovery efficiency can reach 60~70%.

● Heat pipe heat recovery

Set the heat recovery heat pipe in exhaust and fresh air side; the refrigerant would absorb or release the heat to pre-cooling or pre-heating the fresh air. sensible heat recovery efficiency reaches to 70%.

Perfect Quality

◆ **High Efficiency Anti-freeze Cold (Hot) Water Coil**

● Coil

Coil adopts seamless copper tube and aluminum fin under 12MPa water pressure expanding to ensure the minimum contact thermal resistance and high heat transfer efficiency.

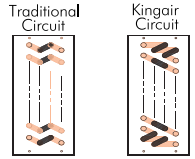

● Patent circuit design

Solve the residual water problem and settle the coil freeze crack matter.

● Water baffle sheet

Water baffle sheet in all kinds of materials is available for your selection; it has many directions to ensure water quality is less than 0.4g/kg dry air.

◆ **Big Slope Water Drain Pan**

● Launder

There is launder in the button of the drain pan with a proper slope. In the lowest point of the drain pan is the drainage pipe that could drain out the condensate water quickly.

● Insulation

In the button of the drain pan is the fire resistance insulation material to avoid condensate water and breeding bacteria.

◆ **Patent Gear Type Air Valve**

● Patent No.: ZL982.X

● Stream line vane

● Comply with aerodynamics theory to avoid scroll noise and reduce the air resistance.

◆ **Fan**

● The fan has obtained AMCA certification

● Imported bearer can run as long as 100000h

● Every fan is passed static and dynamic balancing test.

Product Features

◆ Electrical Heater

- Electrical heater applies PTC heating elements, no fire, safety and reliable.
- Electrical heater elements can install onto the zinc galvanized steel frame.
- Power supply 380V or 220V (depends on user requirement). It can split into one or multiple connection to fulfill different heater power control requirements.
- Electrical heater cable can be extended to the unit cabinet external control box. Main control box is provided by user.

◆ Humidifier

- Dry steam humidify

Direct steam supply, steam pressure ≤ 0.4MPa; three control ways for your selection: manual, electrical control and steam control. It is applied for clean room air conditioning system.

- Electrode humidify

Apply electricity to the water to boil up the water to steam; the output humidifying capacity is controlled by the water level in humidifier and the water conductivity. Water quality requires clean city water of soft water. It is widely applied in all kinds of air conditioning system.

- Electrical heater humidify

Use electrical heater to boil up the water to steam. Water quality requires clean city water or equivalent quality water. It is widely applied in all kinds of air conditioning system.

- Wet membrane humidify

Membrane immersed into water and air blow through it and evaporates. water quality requires clean city water or equivalent quality water. It is widely applied in non clean room air conditioning system.

- High pressure spray humidify

Increase the water pressure and spray out and heat exchange with the air to evaporate. Water quality requires clean city water or equivalent quality water. It is widely applied in all kinds of air conditioning system.

- Spray humidify

Spraying can be used for air enthalpy reduction, dehumidifying and thermal reduction. Vice versa, spraying can also apply for air enthalpy increase, humidifying and thermal increase purpose. The water is sprayed in a way like a curtain to cleanse and purified the air. There are 3 spray options to select, e.g. single row, two rows and three rows spraying.

◆ Rotary Dehumidifier

- It adopts high efficient rotary dehumidifier; the Core part of a rotary dehumidifier is a cellular runner. The runner is a compound of special materials; both sides of the runner are divided by purpose-made sealing device into 2 zones---Treatment area and Regenerative Area; when moist air goes through Treatment Area of the runner, water vapor of moist air is absorbed by special materials, while dry air is sent to another area by the fan; slowly rotating runner carries nearly saturated water vapor into Regenerative Area; in the Regenerative Area, water in the runner is desorbed by reversely injected high-temperature air, and discharge out of the room by the fan.As the runner rotates consistently, above dehumidification and regeneration go on and on and the rotary dehumidifier maintains its continuous and stable dehumidifying state. Regenerative air heating can use electric heater or steam heater, decided by customer. Rotary dehumidifier has large range of use, operate with high efficient in low temperature condition, also, it can handle 100%RH wet air; wheel is cleanable, with long useful life, easy to operate with stable performance. It can be widely used in low temperature low humidity industry area such as spaceflight, aviation,chemical fiber, film prints, bank vault, wood drying, printing, food, military, electronics, pharma, cigarette,personal protection, underground switching room etc.

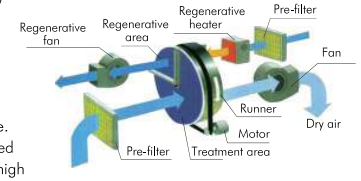

◆ Famous Brand, Ensure the IAQ Quality

- Pre-filter

Efficiency: G3, G4; media: non-woven reinforced cotton& synthetic media; panel filter or bag filter.

- Medium-filter

Efficiency: F5-F9; media: synthetic fiber; bag filter.

- (Sub) HEPA filter

Efficiency: H10-H14; media: glass fiber; Mini-pleat type

- Self-cleaning filter

Activated carbon filter is made of organic carbon fiber which is used for odor elimination and air pollution prevention. In front and rear of the carbon filter require a standard filter installation. Automatic self cleaning high efficiency filter mainly used in the duct conditioning production zone, such as tobacco factory's cigarette packaging area. Cylinder type filter uses reversed compressed air to self cleaning, when the cylinder's dust increases and the pressure differential reaches the setting pressure value, the differential pressure controller will send the signal to activate the compressed air to blow out the cylinder dust.

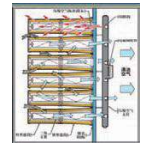

Product Features

- Chemical filter cylinders

Main material is activated carbon to absorb the harmful gas and odors; it can be designed according to the actual dealing air and its density.

◆ **Varies Energy Saving, Environment Friendly and High Efficient Sterilization Device**

- UV lamp

UV lamp is to break up the DNA of microorganism (deoxyribonucleic acid) by ultraviolet rays, it can kill the bacterium immediately or make them loose the ability of breeding.

- Photocatalyst Section

Photocatalyst is also called photocatalytic oxidation reaction. It uses semiconductor material TiO_2 as catalyst, ultraviolet as its light source. It could produce active oxgen and hydroxyl radical which have strong oxidizing property. Then oxygen and hydroxyl radical could break formaldehyde, methylamine, xylol, TVOC and so on into CO_2 and H_2O, so that air is cleaned while destructive organ is eliminated.

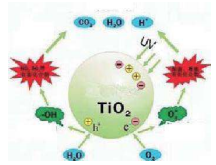

- Ozone generator

Air or oxygen is used as raw material under high frequency and high voltage to release ozone,which is a strong oxidizing agent with very active chemical properties. Ozone can not only oxidize the enzyme needed by bacteria in creating glucose, but also can directly damage cells,DNA and RNA of bacteria and virus, as well as their metabolism. Besides, it can enter their cells through cell membrane and kill bacteria with permeability aberration by working on lipoprotein of the outer LPS on the outer membrane. No virulence will be left as second pollution, so it is praised as " the cleanest oxidant and sterilant". Ozone generator is always installed at air discharge section.

- Electronic Air Cleaner

Adopt electrostatic precipitation technology, ionize suspended particle with positive electricity, and it will be catched by collected plate, to reach clear it in high efficiency. High static voltage can kill the bacterium, virus, dust mite and biological nucleus etc. At the same time it will be burned and collected by plate; sterilization rate can be more than 99%. Completely avoid bacterium, virus to breed and spread.

◆ **Silencer**

- Silencer

Normally, silencer is assembled in back of the air discharge section or return air section in order to reduce the noise level of the air discharge and return air. The absorbing material is made from extra fine glass fiber with high noise absorbing factor, fire retardant, antirust and moisture proof properties. Baffles silencer is efficient for high and medium frequency noise disturbance specially for air conditioning application.

Noise attenuation characteristics table

Silencer section	Required Space	Sound range frequency with noise level reduction (dB)							
		63	125	250	500	1000	2000	4000	8000
1 section	900	8	14	18	21	22	20	16	12
2 sections	1500	10	17	25	28	31	28	24	18

Intelligent Design

◆ **Professional Selection Software**

- Professional selection software
- Graphic interface, easy operation
- Different equipment is optional according to customer's requirement
- Auto output performance diagram
- Confirm spare parts list, calculate the unit' s price automatically
- Output outlook diagram, design diagram and technical instruction

◆ **Easy Installation**

- Dekonair air handing unit is standard module design, its width module and height module could be enlarged in scale, in order to meet different requirement at site.
- All panels can be assembled or dismantled at site. Frequently assembled or dismantled would not affect the tightness and intensity.
- Assembled or disassembled unit is for your choice when delivery.

Technical data

On Coil Velocity (m/s) / Model KZE/KZS/KZW	Air Volume (m³/h)								
	1.60	2.00	2.25	2.50	2.75	2.85	3.00	3.50	4.00
0606	1000	1250	1406	1563	1719	1781	1875	2188	2500
0906	1741	2176	2448	2720	2992	3101	3264	3808	4353
1206	2509	3136	3528	3920	4313	4469	4705	5489	6273
0909	2736	3420	3847	4275	4702	4873	5130	5985	6840
1209	3943	4929	5545	6161	6777	7023	7393	8625	9857
1509	5150	6437	7242	8047	8851	9173	9656	11265	12875
1212	5735	7169	8065	8961	9857	10216	10753	12546	14338
1512	7490	9363	10534	11704	12875	13343	14045	16386	18727
1812	9246	11558	13003	14448	15892	16470	17337	20227	23116
2112	11002	13753	15472	17191	18910	19597	20629	24067	27505
1515	9832	12290	13826	15362	16898	17513	18434	21507	24579
1815	12136	15170	17066	18962	20859	21617	22755	26547	30340
2115	14440	18050	20307	22563	24819	25722	27075	31588	36101
2415	16745	20931	23547	26163	28780	29826	31396	36629	41861
1919	15976	19970	22467	24963	27459	28458	29956	34948	39941
2119	17878	22348	25141	27935	30728	31846	33522	39109	44696
2419	20731	25914	29153	32393	35632	36928	38871	45350	51828
2719	23584	29480	33165	36850	40535	42009	44220	51590	58961
2222	22450	28063	31571	35079	38587	39990	42094	49110	56126
2422	24718	30898	34760	38622	42484	44029	46346	54071	61795
2722	28120	35150	39543	43937	48331	50088	52724	61512	70299
3022	31521	39401	44327	49252	54177	56147	59102	68953	78803
2525	29188	36485	41045	45606	50166	51990	54727	63848	72969
2725	31748	39685	44646	49606	54567	56551	59527	69449	79370
3025	35589	44486	50046	55607	61168	63392	66728	77850	88971
3325	39429	49286	55447	61608	67768	70233	73929	86251	98572
3625	43270	54087	60848	67608	74369	77074	81130	94652	108174
3628	50687	63359	71279	79198	87118	90286	95038	110878	126718
3928	55186	68982	77605	86228	94851	98300	103474	120719	137965
4530	65749	82186	92460	102733	113006	117115	123279	143826	164373
4830	70358	87947	98940	109934	120927	125324	131920	153907	175894
4533	73576	91970	103467	114963	126459	131058	137956	160948	183941
4833	78734	98417	110719	123021	135323	140244	147625	172230	196834
4536	82969	103711	116675	129639	142603	147789	155567	181495	207422
4836	88785	110981	124853	138726	152599	158148	166471	194216	221961
5136	94600	118250	133031	147813	162594	168507	177375	206938	236500
5436	100416	125520	141210	156900	172590	178866	188280	219659	251039
5736	106231	132789	149388	165986	182585	189225	199184	232381	265578
6036	112047	140059	157566	175073	192581	199584	210088	245103	280117
6636	121020	151300	170200	189090	208000	215560	227000	265000	300000

Cooling Capacity Performance

Model KZE KZS KZW	Rated Air Volume (m³/h)	Fresh Air						Return Air					
		4Rows		6Rows		8Rows		4Rows		6Rows		8Rows	
		Sensible Cooling Capacity	Total Cooling Capacity	Sensible Cooling Capacity	Total Cooling Capacity	Sensible Cooling Capacity	Total Cooling Capacity	Sensible Cooling Capacity	Total Cooling Capacity	Sensible Cooling Capacity	Total Cooling Capacity	Sensible Cooling Capacity	Total Cooling Capacity
0606	1563	7.8	17.8	10.2	25	11.5	28.7	5.7	7.3	7.3	10.7	8.3	13
0906	2720	14	30	18	41	20	46	11	14	13	19	15	21
1206	3920	22	49	27	64	29	68	16	22	20	29	21	33
0909	4275	23	49	30	69	33	77	17	23	22	32	24	37
1209	6161	36	81	45	106	48	112	25	35	31	47	33	52
1509	8047	49	114	60	142	63	150	33	47	39	58	44	70
1212	8961	47	105	58	138	62	147	36	48	44	61	44	71
1512	11704	64	147	84	192	93	213	47	65	55	82	61	95
1812	14448	81	189	95	224	101	239	59	83	72	107	79	122
2112	17191	96	224	110	259	121	285	71	101	85	123	90	140
1515	15362	83	192	96	222	107	247	63	90	73	107	80	120
1815	18962	107	248	133	309	142	330	77	108	94	141	104	158
2115	22563	125	290	146	339	157	364	93	132	105	160	120	184
2415	26163	143	331	173	400	186	430	102	150	120	182	135	215
1919	24963	140	324	161	373	177	410	100	144	124	187	133	210
2119	27935	163	381	198	463	213	498	115	164	145	220	154	240
2419	32393	177	409	206	475	222	513	130	184	166	239	175	272
2719	36850	207	481	243	564	265	615	150	210	165	261	196	304
2222	35079	200	466	239	556	257	599	142	199	170	260	192	300
2422	38622	216	502	262	607	283	657	157	222	195	296	209	330
2722	43937	241	558	282	653	307	710	170	244	217	327	236	376
3022	49252	264	608	338	778	371	853	195	282	236	362	257	426
2525	45606	264	613	313	727	340	792	186	264	225	337	246	389
2725	49606	280	649	332	769	363	840	201	285	246	371	260	426
3025	55607	308	710	364	840	399	921	210	305	280	410	290	466
3325	67768	368	851	448	1078	503	1225	272	376	346	525	381	600
3625	74369	407	944	496	1195	556	1355	385	420	381	581	420	663
3628	87118	473	1095	577	1389	648	1578	443	487	444	676	490	772
3928	94851	518	1204	633	1525	710	1730	384	538	486	741	535	845
4530	113006	587	1336	767	1855	859	2094	466	658	576	876	620	965
4830	120927	634	1448	825	1995	922	2250	502	711	603	907	666	1041
4533	126459	549	1196	859	2075	961	2343	522	737	645	980	693	1080
4833	135323	593	1297	923	2232	1032	2518	562	796	675	1015	746	1165
4536	142603	615	1338	964	2327	1079	2632	585	825	705	1054	780	1212
4836	152599	664	1449	1036	2504	1160	2828	630	891	758	1138	838	1307
5136	162594	712	1562	1108	2680	1240	3025	674	958	812	1221	897	1402
5436	172590	761	1674	1181	2857	1321	3222	719	1025	865	1305	956	1497
5736	182585	810	1787	1253	3033	1401	3418	764	1092	919	1388	1014	1591
6036	192581	859	1899	1326	3211	1482	3615	808	1159	972	1472	1074	1686
6636	208000	943	2100	1447	3508	1614	3939	859	1213	1061	1615	1169	1843

Note:
1. Chilled water inlet /outlet water temperature 7℃/12℃
2.Return air intake temperature 27℃ DB/19.5℃ WB; fresh air intake temperature 35℃DB/28℃WB;
3.Above data is only for your reference, if any change of working condition or different coil circuit lead to different cooling capacity
4. All specifications are subject to change by the manufacture without prior notice.
5. Unit of sensible/ total cooling capacity: kW

Heating Capacity Performance

Model KZE KZS KZW	Rated Air Volume (m^3/h)	Fresh Air				Return Air			
		1Row	2Rows	3Rows	4Rows	1Row	2Rows	3Rows	4Rows
		Total Heating Capacity	Total Heating Capacity	Total Heating Capacity	Total Heating Capacity	Total Heating Capacity	Total Heating Capacity	Total Heating Capacity	Total Heating Capacity
0606	1563	5.3	11.7	14.9	18.6	4	9.4	11.9	15.1
0906	2720	13	22	30	36	11	17	25	29
1206	3920	21	33	45	53	16	27	38	43
0909	4275	21	34	48	56	18	27	39	47
1209	6161	32	51	70	83	26	43	59	69
1509	8047	43	70	95	111	35	57	79	92
1212	8961	47	76	104	122	38	62	86	102
1512	11704	62	100	138	160	50	82	115	133
1812	14448	77	127	171	198	64	104	143	166
2112	17191	93	150	204	233	76	123	168	197
1515	15362	75	133	182	210	60	109	150	176
1815	18962	94	167	226	261	77	136	186	218
2115	22563	115	200	270	308	94	163	221	257
2415	26163	136	234	310	359	111	193	261	300
1919	24963	133	220	297	344	112	181	246	288
2119	27935	153	247	334	383	125	203	279	319
2419	32393	178	290	384	444	146	237	324	372
2719	36850	195	332	440	509	168	273	364	424
2222	35079	192	310	411	481	157	257	350	401
2422	38622	212	345	457	530	175	286	381	442
2722	43937	234	395	518	612	200	322	435	508
3022	49252	262	428	573	676	215	367	487	567
2525	45606	239	408	538	626	205	337	450	528
2725	49606	262	429	590	684	216	369	492	572
3025	55607	297	482	665	764	242	415	551	639
3325	67768	332	539	730	849	268	444	616	709
3625	74369	367	594	794	921	299	487	673	781
3628	87118	430	698	928	1079	350	570	792	909
3928	94851	468	767	1005	1181	382	623	854	992
4530	113006	563	915	1213	1412	460	750	1029	1175
4830	120927	605	986	1306	1510	499	807	1082	1259
4533	126459	630	1030	1360	1574	523	848	1148	1321
4833	135323	645	1107	1462	1685	559	908	1234	1416
4536	142603	689	1163	1535	1774	593	959	1296	1491
4836	152599	731	1254	1665	1926	632	1035	1404	1603
5136	162594	793	1317	1783	2079	682	1120	1494	1731
5436	172590	857	1398	1922	2207	696	1206	1599	1860
5736	182585	917	1490	2059	2357	748	1291	1709	1987
6036	192581	980	1601	2188	2518	800	1316	1828	2116
6636	208000	1058	1729	2363	2720	864	1422	1975	2285

Note:

1.Hot water inlet/outlet 60℃ /50℃ .

2.Return air intake temperature 15℃ DB, fresh air intake temperature 7℃ DB;

3.The above data only for reference, if any change of air intake condition, water inlet/outlet temperature lead to different heating capacity

4.All the specifications are subject to change by the manufacture without prior notice.

5.Unit of total heating capacity: kW

Coil Inlet& Outlet Dimension

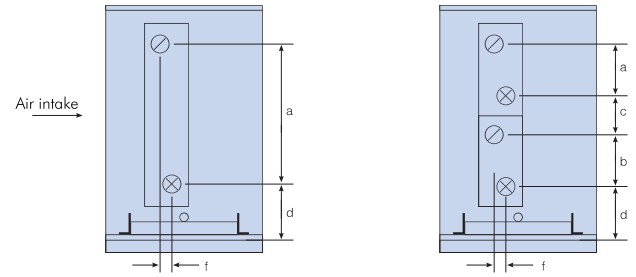

Note: ⊗ water inlet ⊘ water outlet

Model	a	b	c	d			Water pipe DIA (DN)				Condensing drain pipe diameter (DN)	f				
				KZE	KZS	KZW	1/2/3Row	4Rows	6Rows	8Rows		1/2Row	3Rows	4Rows	6Rows	8Rows
XX06	421	–	–	153	163	178	40	40	40	40	32	55	83	83	138	193
XX09	675	–	–	153	163	178	40	40	40	40	32	55	83	83	138	193
XX12	993	–	–	153	163	178	40	65	65	65	32	55	83	83	138	193
XX15	1311	–	–	153	163	178	40	65	65	65	32	55	83	83	138	193
XX19	1570	–	–	168	178	193	40	80	80	80	32	55	83	83	138	193
XX22	993	929	85	168	178	193	40	65	65	65	32	55	83	83	138	193
XX25	1120	1056	85	168	178	193	40	65	65	65	32	55	83	83	138	193

Note: The above dimension is only for reference, if the diameter of water inlet/outlet changes, the position will be changed.

Functional Sections Dimension Chart

Model	Volume Rated Air (m^3/h)	Length (mm)																Other
		Mixing Box	Panel Filter	Bag Filter	Filter Mini-pleat	Cleaner Electronic	Cleaner Photocatalyst	Cleaner Discharge	FA Section	Cooling Coil (1-6 Rows)	Cooling Coil (8-12 Rows)	Water Coil Steam&Hot	Humidifier	Section Access	Silencer	Fan (Model A)	Fan (Model B)	
0606	1563	600	100	500	400	300	200	1200	600	600	300	600	600	600	900(1.8)	900(2.0)		
0906	2720	600	100	500	400	300	200	1200	600	800	300	600	600	900	900(2.0)	1100(2.25)		
1206	3920	600	100	500	400	300	200	1200	600	800	300	600	600	900	800(2.25)	1100(2.5)		
0909	4275	600	100	500	400	300	200	1200	600	800	300	600	600	900	1100(2.5)	1300(2.8)		
1209	6161	600	100	500	400	300	200	1200	600	800	300	600	600	900	900(2.8)	1300(3.15)		
1509	8047	600	100	500	400	300	200	1200	600	800	300	600	600	900	800(3.15)	900(3.55)		
1212	8961	600	100	500	400	300	200	1200	600	800	300	600	600	900	1300(3.15	1400(3.55)		
1512	11704	600	100	500	400	300	200	1200	600	800	300	600	600	900	900(3.55)	1000(4.0)		
1812	14448	800	100	500	400	300	200	1200	600	800	300	600	600	900	1000(4.0)	1100(4.5)		
2112	17191	800	100	500	400	300	200	1200	600	800	300	600	600	900	1100(4.5)	1200(5.0)		
1515	15362	800	100	500	400	300	200	1200	600	800	300	600	600	900	1700(4.5)	1800(5.0)		
1815	18962	800	100	500	400	300	200	1200	600	800	300	600	600	900	1200(5.0)	2000(5.6)		
2115	22563	800	100	500	400	300	200	1200	600	800	300	600	600	900	1200(5.0)	1300(5.6)		
2415	26163	800	100	500	400	300	200	1200	600	800	300	600	600	900	1300(5.6)	1500(6.3)		
1919	24963	800	100	500	400	300	200	1200	600	800	300	600	600	900	1300(5.6)	2300(6.3)		
2119	27935	800	100	500	400	300	200	1200	600	800	300	600	600	900	2300(6.3)	2400(7.1)		
2419	32393	800	100	500	400	300	200	1200	600	800	300	600	600	900	1500(6.3)	1700(7.1)		
2719	36850	800	100	500	400	300	200	1200	600	800	300	600	600	900	1700(7.1)	1800(8.0)		
2222	35079	1000	100	500	400	300	200	1500	600	800	300	600	600	900	2400(7.1)	2600(8.0)		
2422	38622	1000	100	500	400	300	200	1500	600	800	300	600	600	900	1700(7.1)	2600(8.0)		
2722	43937	1000	100	500	400	300	200	1500	600	800	300	600	600	900	1800(8.0)	2100(9.0)		
3022	49252	1000	100	500	400	300	200	1500	600	800	300	600	600	900	1800(8.0)	2100(9.0)		
2525	45606	1000	100	500	400	300	200	1500	600	800	300	600	600	900	1800(8.0)	2800(9.0)		
2725	49606	1000	100	500	400	300	200	1500	600	800	300	600	600	900	1800(8.0)	2100(8.0)		
3025	55607	1000	100	500	400	300	200	1500	600	800	300	600	600	900	2100(9.0)	2200(10.0)		
3325	67768	1000	100	500	400	300	200	1500	600	800	300	600	600	900	2100(9.0)	2200(10.0)		
3625	74369	1200	100	500	400	300	200	1500	600	800	300	600	600	900	2100(9.0)	2200(10.0)		
3628	87118	1200	100	500	400	300	200	1500	600	800	300	600	600	900	2600(8.0*2)			
3928	94851	1200	100	500	400	300	200	1500	600	800	300	600	600	900	2600(8.0*2)			
4530	113006	1200	100	500	400	300	200	1500	1000	1200	600	600	600	900	2600(8.0*2)			
4830	120927	1200	100	500	400	300	200	1500	1000	1200	600	600	600	900	2800(9.0*2)			
4533	126459	1200	100	500	400	300	200	1800	1000	1200	600	600	600	900	2800(9.0*2)			
4833	135323	1200	100	500	400	300	200	1800	1000	1200	600	600	600	900	3000(10.0*2)			
4536	142603	1200	100	500	400	300	200	1800	1000	1200	600	600	600	900	3000(10.0*2)			
4836	152599	1200	100	500	400	300	200	1800	1000	1200	600	600	600	900	3000(10.0*2)			
5136	162594	1200	100	500	400	300	200	1800	1000	1200	600	600	600	900	2800(9.0*3)			
5436	172590	1200	100	500	400	300	200	1800	1000	1200	600	600	600	900	2800(9.0*3)			
5736	182585	1200	100	500	400	300	200	1800	1000	1200	600	600	600	900	2800(9.0*3)			
6036	192581	1200	100	500	400	300	200	1800	1000	1200	600	600	600	900	2800(9.0*3)			
6636	208000	1200	100	500	400	300	200	1800	1000	1200	600	600	600	900	3000(10.0*3)			

For heat recovery model, the dehumidifier section length based on the actual condition to determine for selection.
Activated carbon section: 900

Note: 1.Mixing section and supply air section is of standard dimension. The position and dimension of the damper can be considered based on the situation.
2.The length of the humidifier section can be adjusted based on the requirement condition and method.
3.Wet-membrane humidifier is installed behind the cooling coil without individual section, if it is installed in individual section, it requires 6 modules.
4.In front of the filter section, cooling section, heating section, silencer section an empty section is required for maintenance and servicing purpose.
5.The data above is just for reference, it may vary based on the actual case design.
6.Any special request for the functional sections, please contact us.

Heat Wheel Performance (Low Density)

Air speed		m/s	1.5	2	2.5	3	3.5	4	4.5	5	5.5	Width Height& mm	Depth mm	N.W. kg	Length mm
Recovery efficiency		%	85	82	79	77	74	72	70	68	66				
Air resistance		Pa	73	98	125	148	178	190	217	244	272				
Model		Air volume													
ZLX–L ZLQ–L	–500	m^3/h	450	600	800	950	1120	1250	1450	1620	1790	600	290	32	500
ZLX–L ZLQ–L	–600	m^3/h	700	950	1150	1400	1650	1900	2140	2350	2600	700	290	41	500
ZLX–L ZLQ–L	–700	m^3/h	950	1200	1550	1900	2250	2600	2950	3300	3600	800	290	49	500
ZLX–L ZLQ–L	–800	m^3/h	1200	1700	2100	2500	3000	3400	3800	4300	4700	900	290	57	500
ZLX–L ZLQ–L	–900	m^3/h	1500	2100	2700	3300	3800	4300	4900	5400	6000	1000	290	68	500
ZLX–L ZLQ–L	–1000	m^3/h	1800	2500	3300	4000	4600	5300	6000	6600	7300	1100	290	82	500
ZLX–L ZLQ–L	–1100	m^3/h	2200	3000	4000	4700	5500	6500	7200	8000	9000	1200	290	97	500
ZLX–L ZLQ–L	–1200	m^3/h	2500	3500	4500	5500	6500	7500	8500	9500	10500	1300	290	114	500
ZLX–L ZLQ–L	–1300	m^3/h	3000	4500	5500	6500	8000	9000	10000	11500	12500	1400	290	130	500
ZLX–L ZLQ–L	–1400	m^3/h	3500	5000	6500	8000	9000	10500	12000	13500	15000	1500	290	148	500
ZLX–L ZLQ–L	–1500	m^3/h	4000	5500	7000	8500	10000	11500	13000	14500	16000	1600	290	167	500
ZLX–L ZLQ–L	–1600	m^3/h	5000	6500	8000	10000	11500	13500	15000	16500	18500	1700	290	187	500
ZLX–L ZLQ–L	–1700	m^3/h	5500	7500	9500	11500	13500	15500	17500	19500	21500	1800	290	211	500
ZLX–L ZLQ–L	–1800	m^3/h	6000	8000	11000	13000	15000	17000	19000	21500	24000	1900	290	233	500
ZLX–L ZLQ–L	–1900	m^3/h	6500	9000	11500	14000	16500	19000	21500	24000	26500	2000	290	257	500
ZLX–L ZLQ–L	–2000	m^3/h	7000	10500	13000	15500	18000	21000	24000	26500	29000	2100	290	282	500
ZLX–L ZLQ–L	–2200	m^3/h	9000	12000	16000	18500	22000	25000	28000	32000	35500	2300	290	335	500
ZLX–L ZLQ–L	–2400	m^3/h	10000	14000	18000	23000	26000	31000	35000	40000	45000	2500	314	394	600
ZLX–L ZLQ–L	–2500	m^3/h	12000	15000	20000	24000	29000	33000	37000	42000	46500	2600	331	420	600
ZLX–L ZLQ–L	–2600	m^3/h	13000	17000	21500	26000	31000	35000	40000	45000	50000	2800	331	663	600
ZLX–L ZLQ–L	–2800	m^3/h	15000	20000	25000	30000	36000	41000	47000	52000	58000	3000	430	763	700
ZLX–L ZLQ–L	–3000	m^3/h	17000	22000	28500	35000	41500	47000	53500	59000	65000	3200	430	843	700
ZLX–L ZLQ–L	–3200	m^3/h	19500	25000	32000	40000	47000	54000	61000	68000	76000	3400	430	934	700
ZLX–L ZLQ–L	–3400	m^3/h	22000	29000	36500	45000	53000	60000	68000	77000	85000	3600	430	1022	700
ZLX–L ZLQ–L	–3600	m^3/h	24000	32000	41000	50000	60000	69000	77500	85000	95000	3800	430	1174	700
ZLX–L ZLQ–L	–3800	m^3/h	26000	35000	46000	55000	67000	76000	86000	96000	105000	4000	430	1272	700
ZLX–L ZLQ–L	–4000	m^3/h	29000	40000	50000	61000	72000	83000	95000	110000	120000	4200	430	1374	700
ZLX–L ZLQ–L	–4200	m^3/h	33500	44000	57000	69000	80000	92000	105000	115000	125000	4400	430	1479	700
ZLX–L ZLQ–L	–4400	m^3/h	38000	49000	60500	75000	80500	99000	115000	125000	135000	4600	470	1589	700
ZLX–L ZLQ–L	–4600	m^3/h	40000	54600	69000	80000	95000	110000	125000	138000	156000	4800	470	1702	700
ZLX–L ZLQ–L	–4800	m^3/h	43000	60000	75000	88000	105000	120000	136000	153000	168000	5000	470	1819	700
ZLX–L ZLQ–L	–5000	m^3/h	49000	65000	81000	95000	116000	130000	146000	165000	185000	5200	470	1940	700

Note: 1. Efficiency in above table is sensible efficiency, based on 23℃ air exhaust temperature, 50%.
2. Total heat efficiency= sensible efficiency * correction factor (find the correction factor in according table)

Efficiency Correction (Low Density)

Fresh air temperature	Fresh air RH				
	30%	40%	50%	60%	70%
−20	1.04	1.03	1.03	1.04	1.04
−19	1.03	1.02	1.02	1.03	1.03
−18	1.02	1.01	1.01	1.02	1.03
−17	1.01	1.01	1.01	1.02	1.02
−16	1.00	1	1	1.01	1.02
−15	0.99	1	1	1.01	1.01
−14	0.98	0.99	1	1	1.01
−13	0.97	0.98	0.99	1	1
−12	0.96	0.97	0.98	0.99	1
−11	0.95	0.96	0.97	0.98	0.99
−10	0.94	0.95	0.96	0.97	0.98
−9	0.93	0.94	0.95	0.96	0.97
−8	0.92	0.93	0.94	0.95	0.96
−7	0.91	0.92	0.93	0.94	0.95
−6	0.90	0.91	0.92	0.93	0.95
−5	0.88	0.89	0.91	0.92	0.93
−4	0.87	0.88	0.89	0.91	0.92
−3	0.85	0.86	0.88	0.9	0.91
−2	0.84	0.85	0.86	0.88	0.9
−1	0.82	0.83	0.85	0.86	0.88
0	0.80	0.81	0.83	0.85	0.87
1	0.78	0.8	0.81	0.84	0.86
2	0.76	0.78	0.8	0.82	0.84
3	0.74	0.75	0.77	0.79	0.82
4	0.71	0.73	0.74	0.77	0.79
5	0.68	0.7	0.72	0.74	0.76
6	0.67	0.68	0.69	0.71	0.73
7	0.67	0.67	0.67	0.67	0.69
8	0.66	0.66	0.67	0.67	0.68
9	0.66	0.66	0.66	0.67	0.68
10	0.66	0.66	0.66	0.67	0.68

Efficiency Correction (Low Density)

Fresh air temperature	Fresh air RH				
	30%	40%	50%	60%	70%
11	0.66	0.66	0.66	0.67	0.68
12	0.66	0.66	0.66	0.67	0.68
13	0.66	0.66	0.66	0.68	0.68
14	0.66	0.66	0.65	0.68	0.68
15	0.66	0.65	0.65	0.68	0.68
16	0.66	0.65	0.65	0.68	0.68
17	0.66	0.65	0.65	0.68	0.68
18	0.67	0.65	0.65	0.68	0.68
19	0.67	0.65	0.65	0.68	0.68
20	0.67	0.66	0.64	0.68	0.68
21	0.67	0.67	0.64	0.68	0.68
22	0.67	0.67	0.64	0.68	0.68
23	0.67	0.68	0.68	0.68	0.68
24	0.68	0.68	0.64	0.67	0.68
25	0.68	0.68	0.64	0.66	0.67
26	0.68	0.68	0.64	0.65	0.67
27	0.68	0.68	0.63	0.64	0.66
28	0.68	0.68	0.63	0.63	0.65
29	0.68	0.68	0.62	0.63	0.64
30	0.68	0.68	0.62	0.62	0.63
31	0.68	0.67	0.62	0.62	0.62
32	0.67	0.67	0.62	0.62	0.62
33	0.67	0.66	0.61	0.62	0.63
34	0.66	0.66	0.61	0.62	0.66
35	0.65	0.65	0.61	0.61	0.69
36	0.65	0.65	0.61	0.62	0.72
37	0.64	0.64	0.6	0.65	0.74
38	0.64	0.64	0.6	0.68	0.76
39	0.63	0.63	0.6	0.71	0.78
40	0.63	0.63	0.61	0.73	0.8

Heat Wheel Performance (Standard Density)

Air speed		m/s	1.5	2	2.5	3	3.5	4	4.5	5	5.5	Width Height& mm	Depth mm	N.W. kg	Length mm
Recovery efficiency		%	82	78	75	72	69	67	64	62	60				
Air resistance		Pa	60	80	100	120	145	170	190	210	240				
Model		Air volume													
ZNX-N ZNQ-N	-500	m³/h	450	600	800	950	1120	1250	1450	1620	1790	600	290	29	500
ZNX-N ZNQ-N	-600	m³/h	700	950	1150	1400	1650	1900	2140	2350	2600	700	290	38	500
ZNX-N ZNQ-N	-700	m³/h	950	1200	1550	1900	2250	2600	2950	3300	3600	800	290	46	500
ZNX-N ZNQ-N	-800	m³/h	1200	1700	2100	2500	3000	3400	3800	4300	4700	900	290	55	500
ZNX-N ZNQ-N	-900	m³/h	1500	2100	2700	3300	3800	4300	4900	5400	6000	1000	290	65	500
ZNX-N ZNQ-N	-1000	m³/h	1800	2500	3300	4000	4600	5300	6000	6600	7300	1100	290	80	500
ZNX-N ZNQ-N	-1100	m³/h	2200	3000	4000	4700	5500	6500	7200	8000	9000	1200	290	90	500
ZNX-N ZNQ-N	-1200	m³/h	2500	3500	4500	5500	6500	7500	8500	9500	10500	1300	290	105	500
ZNX-N ZNQ-N	-1300	m³/h	3000	4500	5500	6500	8000	9000	10000	11500	12500	1400	290	120	500
ZNX-N ZNQ-N	-1400	m³/h	3500	5000	6500	8000	9000	10500	12000	13500	15000	1500	290	140	500
ZNX-N ZNQ-N	-1500	m³/h	4000	5500	7000	8500	10000	11500	13000	14500	16000	1600	290	160	500
ZNX-N ZNQ-N	-1600	m³/h	5000	6500	8000	10000	11500	13500	15000	16500	18500	1700	290	180	500
ZNX-N ZNQ-N	-1700	m³/h	5500	7500	9500	11500	13500	15500	17500	19500	21500	1800	290	200	500
ZNX-N ZNQ-N	-1800	m³/h	6000	8000	11000	13000	15000	17000	19000	21500	24000	1900	290	220	500
ZNX-N ZNQ-N	-1900	m³/h	6500	9000	11500	14000	16500	19000	21500	24000	26500	2000	290	240	500
ZNX-N ZNQ-N	-2000	m³/h	7000	10500	13000	15500	18000	21000	24000	26500	29000	2100	290	270	500
ZNX-N ZNQ-N	-2200	m³/h	9000	12000	16000	18500	22000	25000	28000	32000	35500	2300	290	320	500
ZNX-N ZNQ-N	-2400	m³/h	10000	14000	18000	23000	26000	31000	35000	40000	45000	2500	314	380	600
ZNX-N ZNQ-N	-2500	m³/h	12000	15000	20000	24000	29000	33000	37000	42000	46500	2600	331	410	600
ZNX-N ZNQ-N	-2600	m³/h	13000	17000	21500	26000	31000	35000	40000	45000	50000	2800	331	600	600
ZNX-N ZNQ-N	-2800	m³/h	15000	20000	25000	30000	36000	41000	47000	52000	58000	3000	430	750	700
ZNX-N ZNQ-N	-3000	m³/h	17000	22000	28500	35000	41500	47000	53500	59000	65000	3200	430	820	700
ZNX-N ZNQ-N	-3200	m³/h	19500	25000	32000	40000	47000	54000	61000	68000	76000	3400	430	910	700
ZNX-N ZNQ-N	-3400	m³/h	22000	29000	36500	45000	53000	60000	68000	77000	85000	3600	430	1000	700
ZNX-N ZNQ-N	-3600	m³/h	24000	32000	41000	50000	60000	69000	77500	85000	95000	3800	430	1100	700
ZNX-N ZNQ-N	-3800	m³/h	26000	35000	46000	55000	67000	76000	86000	96000	105000	4000	430	1200	700
ZNX-N ZNQ-N	-4000	m³/h	29000	40000	50000	61000	72000	83000	95000	110000	120000	4200	430	1350	700
ZNX-N ZNQ-N	-4200	m³/h	33500	44000	57000	69000	80000	92000	105000	115000	125000	4400	430	1450	700
ZNX-N ZNQ-N	-4400	m³/h	38000	49000	60500	75000	80500	99000	115000	125000	135000	4600	470	1550	700
ZNX-N ZNQ-N	-4600	m³/h	40000	54600	69000	80000	95000	110000	125000	138000	156000	4800	470	1700	700
ZNX-N ZNQ-N	-4800	m³/h	43000	60000	75000	88000	105000	120000	136000	153000	168000	5000	470	1800	700
ZNX-N ZNQ-N	-5000	m³/h	49000	65000	81000	95000	116000	130000	146000	165000	185000	5200	470	1900	700

Note: 1. Efficiency in above table is sensible efficiency, based on 23℃ air exhaust temperature, 50%.
2. Total heat efficiency= sensible efficiency * correction factor (find the correction factor in according table)

Efficiency Correction (Standard Density)

Fresh air temperature	Fresh air RH					
	30%	40%	50%	60%	70%	80%
-20	1.03	1.03	1.04	1.04	1.05	1.05
-19	1.02	1.03	1.03	1.04	1.04	1.05
-18	1.02	1.02	1.03	1.03	1.04	1.04
-17	1.01	1.02	1.02	1.03	1.03	1.04
-16	1.00	1.01	1.02	1.02	1.03	1.03
-15	1.00	1.00	1.01	1.02	1.02	1.03
-14	0.99	1.00	1.00	1.01	1.02	1.02
-13	0.98	0.99	0.99	1.00	1.01	1.02
-12	0.97	0.98	0.99	0.99	1.00	1.01
-11	0.96	0.97	0.98	0.99	0.99	1.00
-10	0.95	0.96	0.97	0.98	0.99	1.00
-9	0.94	0.95	0.96	0.97	0.98	0.99
-8	0.92	0.93	0.95	0.96	0.97	0.98
-7	0.91	0.92	0.93	0.95	0.96	0.97
-6	0.90	0.91	0.92	0.93	0.95	0.96
-5	0.88	0.89	0.91	0.92	0.93	0.95
-4	0.87	0.88	0.89	0.91	0.92	0.94
-3	0.85	0.86	0.88	0.89	0.91	0.93
-2	0.83	0.85	0.86	0.88	0.90	0.92
-1	0.82	0.83	0.85	0.87	0.89	0.91
0	0.80	0.81	0.83	0.85	0.87	0.90
1	0.78	0.79	0.81	0.83	0.85	0.88
2	0.75	0.77	0.79	0.81	0.83	0.86
3	0.73	0.75	0.76	0.78	0.81	0.84
4	0.70	0.72	0.74	0.76	0.78	0.81
5	0.68	0.69	0.71	0.73	0.75	0.78
6	0.65	0.66	0.67	0.69	0.72	0.75
7	0.65	0.65	0.65	0.65	0.68	0.70
8	0.65	0.65	0.65	0.65	0.66	0.66
9	0.65	0.65	0.64	0.65	0.66	0.66
10	0.64	0.64	0.64	0.66	0.66	0.66

Efficiency Correction (Standard Density)

Fresh air temperature	Fresh air RH					
	30%	40%	50%	60%	70%	80%
11	0.64	0.64	0.64	0.66	0.66	0.66
12	0.64	0.64	0.64	0.66	0.66	0.66
13	0.64	0.64	0.64	0.66	0.66	0.66
14	0.64	0.64	0.64	0.66	0.66	0.66
15	0.64	0.63	0.63	0.66	0.66	0.66
16	0.64	0.63	0.63	0.66	0.66	0.66
17	0.65	0.63	0.63	0.66	0.66	0.66
18	0.65	0.63	0.63	0.66	0.66	0.66
19	0.65	0.63	0.63	0.66	0.66	0.66
20	0.65	0.64	0.63	0.66	0.66	0.66
21	0.65	0.65	0.62	0.66	0.66	0.66
22	0.66	0.65	0.62	0.66	0.66	0.66
23	0.66	0.66	0.66	0.66	0.66	0.66
24	0.66	0.66	0.62	0.66	0.66	0.66
25	0.66	0.66	0.61	0.65	0.66	0.66
26	0.66	0.66	0.61	0.63	0.65	0.66
27	0.66	0.66	0.61	0.62	0.65	0.65
28	0.66	0.66	0.61	0.61	0.64	0.65
29	0.66	0.66	0.61	0.61	0.63	0.64
30	0.66	0.66	0.61	0.61	0.61	0.63
31	0.66	0.66	0.60	0.61	0.61	0.66
32	0.66	0.65	0.60	0.60	0.61	0.69
33	0.66	0.65	0.60	0.60	0.63	0.72
34	0.66	0.64	0.60	0.60	0.66	0.74
35	0.66	0.64	0.60	0.60	0.69	0.77
36	0.66	0.63	0.59	0.61	0.72	0.79
37	0.66	0.62	0.59	0.64	0.74	0.81
38	0.66	0.62	0.59	0.67	0.76	0.82
39	0.66	0.61	0.59	0.70	0.78	0.84
40	0.66	0.61	0.60	0.72	0.80	0.85

Heat Wheel Performance (High Density)

Air speed		m/s	1.5	2	2.5	3	3.5	4	4.5	5	5.5	Width Height& mm	Depth mm	N.W. kg	Length mm
Recovery efficiency		%	76	71	68	64	60	57	55	53	51				
Air resistance		Pa	50	60	70	90	110	130	150	170	200				
Model		Air volume													
ZHX–H ZHQ–H	–500	m³/h	450	600	800	950	1120	1250	1450	1620	1790	600	290	28	500
ZHX–H ZHQ–H	–600	m³/h	700	950	1150	1400	1650	1900	2140	2350	2600	700	290	36	500
ZHX–H ZHQ–H	–700	m³/h	950	1200	1550	1900	2250	2600	2950	3300	3600	800	290	44	500
ZHX–H ZHQ–H	–800	m³/h	1200	1700	2100	2500	3000	3400	3800	4300	4700	900	290	53	500
ZHX–H ZHQ–H	–900	m³/h	1500	2100	2700	3300	3800	4300	4900	5400	6000	1000	290	62	500
ZHX–H ZHQ–H	–1000	m³/h	1800	2500	3300	4000	4600	5300	6000	6600	7300	1100	290	75	500
ZHX–H ZHQ–H	–1100	m³/h	2200	3000	4000	4700	5500	6500	7200	8000	9000	1200	290	85	500
ZHX–H ZHQ–H	–1200	m³/h	2500	3500	4500	5500	6500	7500	8500	9500	10500	1300	290	100	500
ZHX–H ZHQ–H	–1300	m³/h	3000	4500	5500	6500	8000	9000	10000	11500	12500	1400	290	115	500
ZHX–H ZHQ–H	–1400	m³/h	3500	5000	6500	8000	9000	10500	12000	13500	15000	1500	290	130	500
ZHX–H ZHQ–H	–1500	m³/h	4000	5500	7000	8500	10000	11500	13000	14500	16000	1600	290	150	500
ZHX–H ZHQ–H	–1600	m³/h	5000	6500	8000	10000	11500	13500	15000	16500	18500	1700	290	160	500
ZHX–H ZHQ–H	–1700	m³/h	5500	7500	9500	11500	13500	15500	17500	19500	21500	1800	290	190	500
ZHX–H ZHQ–H	–1800	m³/h	6000	8000	11000	13000	15000	17000	19000	21500	24000	1900	290	215	500
ZHX–H ZHQ–H	–1900	m³/h	6500	9000	11500	14000	16500	19000	21500	24000	26500	2000	290	235	500
ZHX–H ZHQ–H	–2000	m³/h	7000	10500	13000	15500	18000	21000	24000	26500	29000	2100	290	260	500
ZHX–H ZHQ–H	–2200	m³/h	9000	12000	16000	18500	22000	25000	28000	32000	35500	2300	290	300	500
ZHX–H ZHQ–H	–2400	m³/h	10000	14000	18000	23000	26000	31000	35000	40000	45000	2500	314	360	600
ZHX–H ZHQ–H	–2500	m³/h	12000	15000	20000	24000	29000	33000	37000	42000	46500	2600	331	400	600
ZHX–H ZHQ–H	–2600	m³/h	13000	17000	21500	26000	31000	35000	40000	45000	50000	2800	331	580	600
ZHX–H ZHQ–H	–2800	m³/h	15000	20000	25000	30000	36000	41000	47000	52000	58000	3000	430	700	700
ZHX–H ZHQ–H	–3000	m³/h	17000	22000	28500	35000	41500	47000	53500	59000	65000	3200	430	800	700
ZHX–H ZHQ–H	–3200	m³/h	19500	25000	32000	40000	47000	54000	61000	68000	76000	3400	430	900	700
ZHX–H ZHQ–H	–3400	m³/h	22000	29000	36500	45000	53000	60000	68000	77000	85000	3600	430	996	700
ZHX–H ZHQ–H	–3600	m³/h	24000	32000	41000	50000	60000	69000	77500	85000	95000	3800	430	1060	700
ZHX–H ZHQ–H	–3800	m³/h	26000	35000	46000	55000	67000	76000	86000	96000	105000	4000	430	1180	700
ZHX–H ZHQ–H	–4000	m³/h	29000	40000	50000	61000	72000	83000	95000	110000	120000	4200	430	1300	700
ZHX–H ZHQ–H	–4200	m³/h	33500	44000	57000	69000	80000	92000	105000	115000	125000	4400	430	1400	700
ZHX–H ZHQ–H	–4400	m³/h	38000	49000	60500	75000	80500	99000	115000	125000	135000	4600	470	1500	700
ZHX–H ZHQ–H	–4600	m³/h	40000	54600	69000	80000	95000	110000	125000	138000	156000	4800	470	1680	700
ZHX–H ZHQ–H	–4800	m³/h	43000	60000	75000	88000	105000	120000	136000	153000	168000	5000	470	1760	700
ZHX–H ZHQ–H	–5000	m³/h	49000	65000	81000	95000	116000	130000	146000	165000	185000	5200	470	1850	700

Note: 1. Efficiency in above table is sensible efficiency, based on 23℃ air exhaust temperature, 50%.
2. Total heat efficiency= sensible efficiency * correction factor (find the correction factor in according table)

Efficiency Correction (High Density)

Fresh air temperature	Fresh air RH					
	30%	40%	50%	60%	70%	80%
−20	1.05	1.05	1.06	1.06	1.06	1.07
−19	1.04	1.04	1.05	1.05	1.06	1.06
−18	1.03	1.04	1.04	1.05	1.05	1.06
−17	1.02	1.03	1.03	1.04	1.05	1.05
−16	1.01	1.02	1.03	1.03	1.04	1.04
−15	1.00	1.01	1.02	1.02	1.03	1.04
−14	0.99	1.00	1.01	1.02	1.02	1.03
−13	0.98	0.99	1.00	1.01	1.01	1.02
−12	0.97	0.98	0.99	1.00	1.00	1.01
−11	0.96	0.97	0.98	0.98	0.99	1.00
−10	0.95	0.96	0.96	0.97	0.98	0.99
−9	0.93	0.94	0.95	0.96	0.97	0.98
−8	0.92	0.93	0.94	0.95	0.96	0.97
−7	0.90	0.91	0.92	0.94	0.95	0.96
−6	0.89	0.90	0.91	0.92	0.94	0.95
−5	0.87	0.88	0.90	0.91	0.92	0.94
−4	0.86	0.87	0.88	0.90	0.98	0.93
−3	0.84	0.85	0.87	0.88	0.90	0.91
−2	0.82	0.83	0.85	0.86	0.88	0.90
−1	0.80	0.81	0.83	0.85	0.87	0.89
0	0.78	0.79	0.81	0.83	0.85	0.87
1	0.75	0.77	0.79	0.80	0.82	0.85
2	0.73	0.74	0.76	0.78	0.80	0.83
3	0.70	0.72	0.73	0.75	0.77	0.80
4	0.67	0.69	0.70	0.72	0.74	0.77
5	0.64	0.66	0.67	0.69	0.71	0.73
6	0.61	0.62	0.63	0.65	0.66	0.69
7	0.61	0.61	0.61	0.61	0.63	0.63
8	0.61	0.61	0.61	0.62	0.63	0.63
9	0.61	0.61	0.61	0.62	0.63	0.63
10	0.61	0.61	0.61	0.62	0.63	0.63

Efficiency Correction (High Density)

Fresh air temperature	Fresh air RH					
	30%	40%	50%	60%	70%	80%
11	0.61	0.61	0.61	0.62	0.63	0.63
12	0.60	0.60	0.60	0.63	0.63	0.63
13	0.60	0.60	0.60	0.63	0.63	0.63
14	0.60	0.60	0.60	0.63	0.63	0.63
15	0.61	0.60	0.60	0.63	0.63	0.63
16	0.61	0.60	0.60	0.63	0.63	0.63
17	0.61	0.60	0.60	0.63	0.63	0.63
18	0.61	0.59	0.60	0.63	0.63	0.63
19	0.61	0.60	0.59	0.63	0.63	0.63
20	0.62	0.60	0.59	0.63	0.63	0.63
21	0.62	0.61	0.59	0.63	0.63	0.63
22	0.62	0.62	0.59	0.63	0.63	0.63
23	0.63	0.63	0.63	0.63	0.63	0.63
24	0.63	0.63	0.58	0.62	0.63	0.63
25	0.63	0.63	0.58	0.61	0.62	0.63
26	0.63	0.63	0.58	0.60	0.62	0.62
27	0.63	0.63	0.58	0.58	0.61	0.62
28	0.63	0.63	0.58	0.58	0.60	0.61
29	0.63	0.63	0.58	0.58	0.59	0.60
30	0.63	0.63	0.57	0.58	0.58	0.61
31	0.63	0.63	0.57	0.57	0.58	0.65
32	0.63	0.62	0.57	0.57	0.58	0.68
33	0.63	0.61	0.57	0.57	0.60	0.71
34	0.63	0.61	0.57	0.57	0.64	0.74
35	0.63	0.60	0.57	0.57	0.67	0.76
36	0.63	0.60	0.57	0.57	0.70	0.78
37	0.63	0.59	0.56	0.61	0.72	0.80
38	0.63	0.59	0.56	0.64	075	0.82
39	0.63	0.58	0.56	0.67	0.77	0.84
40	0.62	0.58	0.56	0.70	0.79	0.85

Functional Sections Length, Weight (Casing)

Model KZE/KZS/KZW	Cabinet's empty section weight (kg)														
	Panel thickness 25mm					Panel thickness 35mm					Panel thickness 50mm				
	End panel	300	600	900	1200	End panel	300	600	900	1200	End panel	300	600	900	1200
0606	4	25	38	52	72	5	27	40	55	76	6	32	47	62	86
0906	6	31	49	66	84	7	31	50	68	87	8	34	55	76	97
1206	8	33	53	72	91	9	34	54	74	94	10	37	60	83	106
0909	9	38	58	77	96	10	39	59	79	99	10	42	65	88	111
1209	12	40	62	83	104	13	41	63	85	107	13	45	70	96	121
1509	14	43	66	88	111	15	44	67	91	115	16	48	75	103	131
1212	15	48	71	93	116	16	49	72	96	120	17	53	81	108	136
1512	18	50	75	99	123	19	51	76	102	128	20	56	86	116	146
1812	21	52	78	105	131	23	53	81	108	136	24	59	91	123	156
2112	25	55	82	110	138	26	56	85	114	144	27	61	96	131	166
1515	23	57	84	110	136	23	58	86	113	141	24	64	96	128	161
1815	27	60	88	115	143	27	61	90	119	149	29	67	101	136	171
2115	31	62	91	121	151	32	63	94	125	156	33	69	106	143	180
2415	35	64	95	127	158	36	66	98	131	164	37	72	112	151	190
1919	35	70	101	132	162	36	72	104	136	168	37	78	117	155	194
2119	38	72	103	135	167	39	73	106	140	174	40	80	120	160	200
2419	43	74	107	141	174	44	76	111	146	181	45	83	125	168	210
2719	50	76	111	147	182	49	78	115	152	189	51	86	131	175	220
2222	47	80	114	148	182	46	81	117	153	189	48	89	132	175	218
2422	51	81	116	152	187	50	83	120	157	194	52	91	136	180	225
2722	57	84	120	157	194	56	85	124	163	202	58	94	141	188	235
3022	63	86	124	163	201	62	88	128	168	210	63	97	146	195	245
2525	59	89	127	164	202	59	91	130	170	210	60	100	148	195	243
2725	65	91	129	168	206	63	93	133	174	215	65	102	151	200	250
3025	72	93	133	174	214	69	95	137	180	223	71	105	156	208	259
3325	79	95	137	179	221	76	98	142	185	231	78	108	161	215	269
3625	86	98	141	185	228	82	100	146	191	239	84	110	167	223	279
3628	95	105	150	196	241	91	107	155	202	251	94	118	177	235	294
3928	104	107	154	201	248	99	110	159	208	259	101	121	182	243	304
4530	122	117	168	220	271	120	120	174	228	283	123	132	199	266	333
4830	135	119	172	225	278	128	122	178	234	291	131	135	205	274	343
4533	133	124	177	230	283	132	127	183	239	296	134	140	210	279	348
4833	147	126	181	236	291	140	129	187	245	304	143	143	215	286	358
4536	144	131	186	241	296	143	134	192	250	309	146	148	220	292	363
4836	159	134	190	247	303	152	137	196	256	317	155	151	225	299	373
5136	171	136	194	252	310	161	139	200	262	325	164	154	230	307	383
5436	181	138	198	258	318	170	142	205	268	333	173	157	236	314	393
5736	191	141	202	264	325	179	144	209	274	340	182	160	241	322	402
6036	200	143	206	269	332	188	146	213	280	348	191	163	246	329	412
6636	220	158	227	296	365	207	161	234	308	383	210	180	271	362	453

Note:

1.Cooling section weight= cooling section casing modules weight + cooling coil rows weight

2.Fan section weight= fan section casing modules weigh + fan blower weight + fan motor weight + transmission parts weight + fan blower/motor support base weight

3.Unit's weight= total section weight 1.and 2 + end panel weight

Unit Functional Sections Weight (Components)

Model KZE KZS KZW	Weight kg																				
	Mixing Box	Panel Filter	Bag Filter	Cleaner Electronic	Cleaner Photocatalyst	Water baffle sheet	Silencer	Wet-membrane humidifier (dry condition)				Standard 1/2'' coil (no water)									
								Thick 50 mm	Thick 100 mm	Thick 150 mm	Thick 200 mm	1 Row	2 Rows	3 Rows	4 Rows	5 Rows	6 Rows	8 Rows	10 Rows	12 Rows
0606	12	4	2.5	15	4	4	15	6	8	9	11	12	15	18	20	22	25	29	33	40
0906	15	5	3	23	5	5	20	8	10	11	13	15	18	20	22	25	28	34	39	45
1206	22	6	4	38	6	7	26	9	11	13	16	16	20	23	26	30	33	41	48	56
0909	15	7	4	38	7	7	30	9	11	13	15	24	29	32	36	40	45	54	63	72
1209	22	9	6	46	9	10	40	10	13	15	18	25	32	37	41	47	53	65	77	89
1509	29	11	7	61	11	13	50	11	14	18	21	27	35	41	47	54	62	76	91	106
1212	22	12	8	69	12	15	53	11	14	18	22	37	46	53	60	69	77	94	111	129
1512	29	15	10	84	15	20	66	12	16	21	25	39	50	59	68	79	89	111	132	153
1812	51	18	12	107	18	24	79	13	18	23	28	41	55	65	76	89	102	127	153	178
2112	61	21	14	115	21	29	92	14	20	26	31	43	59	72	85	99	114	144	173	203
1515	42	19	12	107	19	26	83	13	18	24	29	51	66	78	89	103	117	145	173	201
1815	51	23	15	130	23	32	99	14	20	27	33	53	71	86	100	117	134	167	200	233
2115	61	26	17	168	26	38	116	16	23	29	36	56	77	94	111	130	150	188	227	266
2415	70	30	19	184	30	44	132	17	25	32	40	59	82	102	122	144	166	210	254	298
1919	54	30	19	183	30	42	132	16	24	31	38	68	91	110	129	151	173	216	260	303
2119	61	34	21	199	34	47	146	17	25	33	41	70	96	117	138	162	186	234	282	330
2419	70	38	25	222	38	54	167	18	27	36	45	73	102	127	151	179	206	261	316	370
2719	80	43	28	253	43	61	188	20	30	40	50	77	109	137	165	195	226	288	349	410
2222	84	41	26	252	41	58	177	19	29	38	48	84	117	143	170	200	220	290	349	409
2422	92	44	28	268	44	64	194	20	30	41	51	87	122	151	180	213	246	311	376	441
2722	105	50	32	321	50	73	218	22	33	44	55	91	130	163	196	233	269	343	416	489
3022	118	55	35	337	55	82	242	23	35	48	60	95	138	175	212	253	293	375	456	537
2525	97	52	34	336	52	76	229	22	33	45	57	100	141	175	210	248	287	363	440	517
2725	105	57	36	337	57	83	248	23	35	48	60	103	147	184	222	263	305	387	470	553
3025	118	63	40	390	63	93	275	24	38	52	65	108	156	198	240	286	332	423	515	607
3325	130	69	44	414	69	103	303	26	41	55	70	112	165	211	258	308	359	459	560	661
3625	177	76	48	460	76	113	330	27	43	59	75	117	174	225	276	331	385	495	605	714
3628	177	85	54	544	85	132	370	30	48	66	84	136	203	263	323	387	451	579	708	836
3928	192	92	59	597	92	144	400	32	51	70	90	141	214	279	344	413	482	621	760	899
4530	224	113	73	705	113	171	495	36	58	80	103	156	241	319	396	478	560	724	888	1052
4830	239	121	77	751	121	183	528	37	61	85	108	162	252	335	418	505	592	767	942	1117
4533	224	125	80	782	125	192	545	38	62	87	111	175	270	356	443	535	626	810	993	1177
4833	239	133	85	828	133	205	581	40	66	92	118	181	282	374	467	565	663	858	1054	1249
4536	224	136	87	874	136	192	594	38	62	87	111	176	272	358	445	537	629	813	996	1180
4836	239	145	93	943	145	218	634	41	69	96	123	193	301	399	498	602	706	914	1122	1330
5136	255	154	99	1011	154	232	673	43	72	101	130	199	313	418	523	634	744	965	1186	1407
5436	270	163	104	1058	163	247	713	45	75	106	136	206	326	438	549	666	783	1017	1251	1485
5736	286	172	110	1127	172	261	752	47	79	111	143	212	339	457	575	698	821	1068	1315	1562
6036	302	181	116	1188	181	275	792	49	82	116	149	219	352	476	600	730	860	1120	1379	1639
6636	332	199	128	1307	199	303	871	54	90	128	164	241	387	524	660	803	946	1232	1517	1802

Fan Blower, Fan Motor & Transmission Parts Weight Charts

Fan blower model	Forward curve blower	Backward curve blower	Fan blower, fan motor installation support base
	kg	kg	kg
180	10	–	11
200	11	–	13
225	13	–	17
250	22	23	17
280	25	26	18
315	31	32	20
355	41	44	21
400	53	59	38
450	57	74	42
500	77	84	45
560	126	138	46
630	176	177	53
710	220	253	58
800	289	326	78
900	384	427	85
1000	450	518	92

Motor power	Motor weight	Transmission part weight
kW	kg	kg
0.37	11	3
0.55	16	3
0.75	17	3
1.1	21	4
1.5	25	5
2.2	32	7
3	38	8
4	49	14
5.5	64	20
7.5	77	23
11	122	35
15	140	42
18.5	170	56
22	186	63
30	254	84
37	308	107
45	335	124
55	450	135
75	534	163

Fan Blower Air Discharge Direction

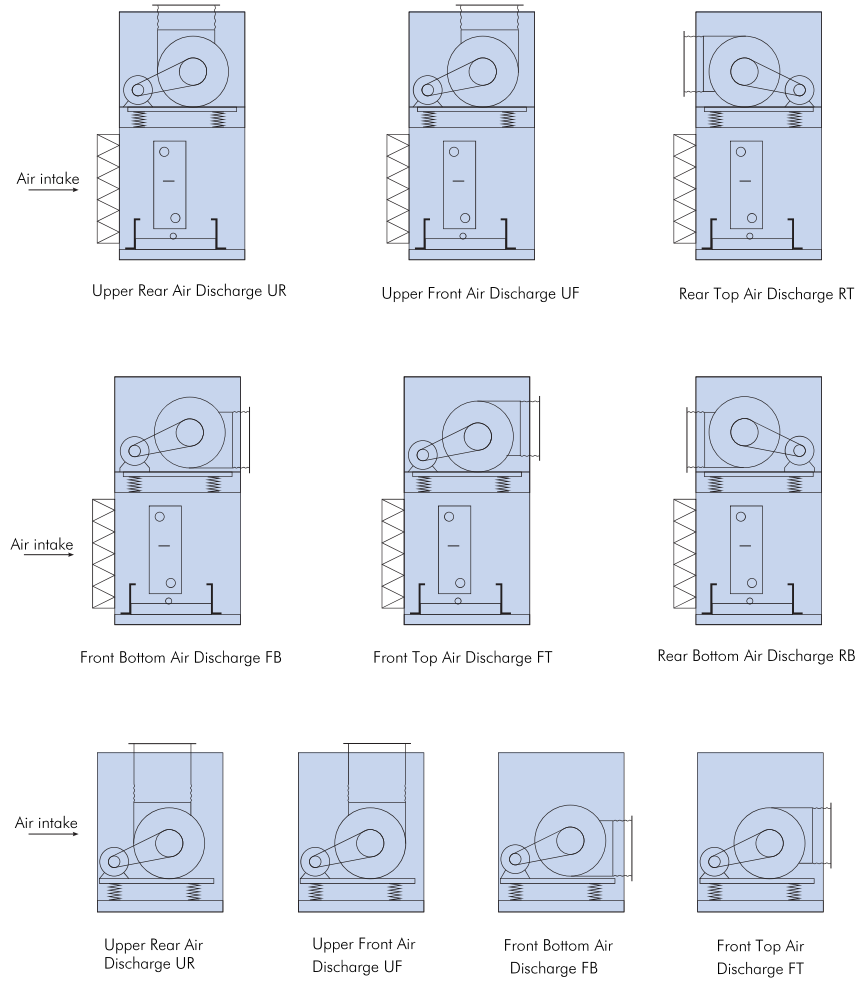

Classical Functional Sections Combination

A- Mixing box
B- Pre-filter section
C- Cooling section
D- Fan section
E- Heating section
F- Humidifier section
G- Diffuse section
H- Medium filter
I- Supply air section
J- Access section
K- Heat wheel recovery section
L- Fresh air section
M- Discharge air fan section
N- Return air section
O- Return air section
P- Bypass section
Q- Supply air fan section
R- Dehumidifier section
S-Pre-cooling section
T- Plate heat recovery

Clean type isothermal & isohumidity unit with dehumidifier

Unit Installation

- Ensure the unit installation base ground is leveled.
- Leave sufficient space around the unit especially for piping installation and servicing panel side.(Proposed not less than 1m),for daily maintenance application.
- To avoid air leak from condensation drain pipe, a U-trap must be applied before connecting with the external installed pipe
- Please connect the piping according to the factory operation guide label of the unit. During connection, apply an even force and not exceed force to avoid damage done to the internal structure of the unit.
- Standard power supply is 380V/50Hz three phases with four wire. Before connecting to the input power supply, make sure the supply voltage fulfill the label requirement. No phase shortage and unstable supply voltage allowed. Check whether the blowing wheel is rotating in the correct direction.
- All the motors should be equipped with an overload protector.
- Flexible connector should be applied on the external duct and water pipe connection to avoid any vibration transmission.

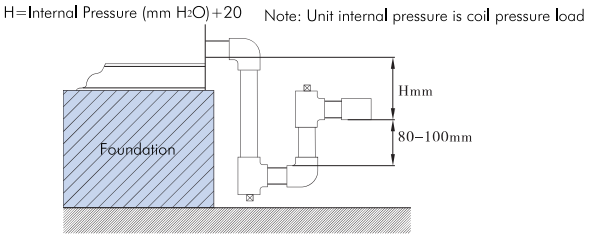

U-trap Diagram

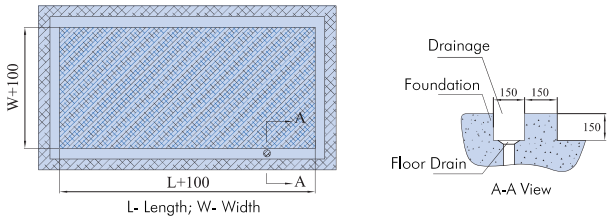

L- Length; W- Width

Foundation Diagram

Wiring Diagram

Directly Start Up (Motor Power≤11kW)

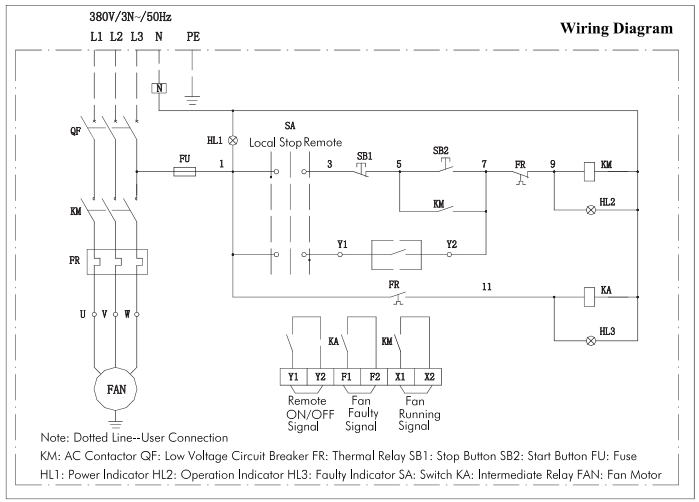

Note: Dotted Line--User Connection

KM: AC Contactor QF: Low Voltage Circuit Breaker FR: Thermal Relay SB1: Stop Button SB2: Start Button FU: Fuse

HL1: Power Indicator HL2: Operation Indicator HL3: Faulty Indicator SA: Switch KA: Intermediate Relay FAN: Fan Motor

Star Delta Starting (Motor Power≥15kW)

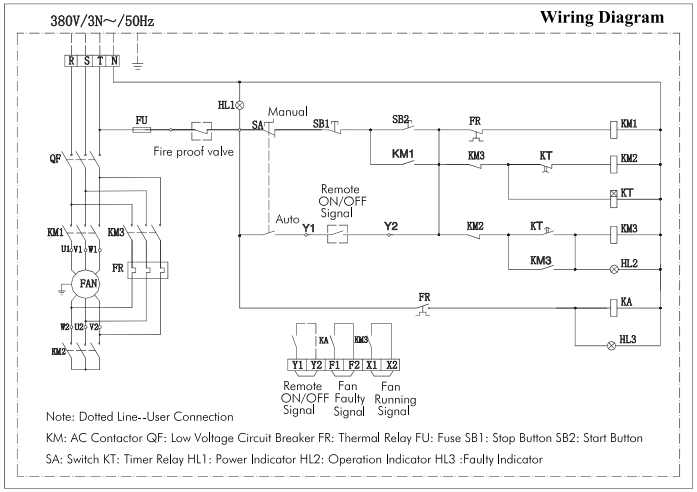

Note: Dotted Line--User Connection

KM: AC Contactor QF: Low Voltage Circuit Breaker FR: Thermal Relay FU: Fuse SB1: Stop Button SB2: Start Button

SA: Switch KT: Timer Relay HL1: Power Indicator HL2: Operation Indicator HL3 :Faulty Indicator

Wiring Diagram

Electrical Heater Wiring

The electrical heater provided as a frame structural, complete internal wiring and with standby power supply socket that according to the unit label instruction. For electrical heater control wiring, please refer to below diagram.

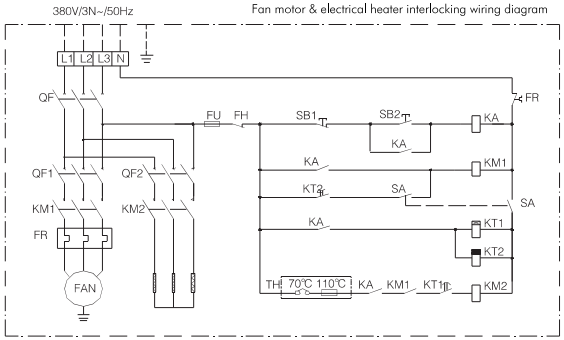

SB2- Start Button; KA-Intermediate Relay; KM1-Fan Motor Contactor; KM2-Electrical Heater Contactor

TH-Electrical Heater Protector; FH-Fire proof valve; KT1- On Delay Timer Relay; KT2- Off Delay Timer Relay

QF-Low Voltage Circuit Breaker; SA-Modes Switch (Open-Fan; Close-heater)

During power on, the On delay timer relay set as minimum 30 seconds, else the Off delay timer set as minimum 180 seconds.

Warning: Electrical heater thermostat must connect with the blower motor and electrical heater interlocking control circuit, no circuit is allowed. After fan motor operating normally, then the electrical heater will be activated. When the unit stops, electrical heater cut off first for 3 minutes, then the blower motor will stop.

In the control design, the humidifier and other components' wiring diagram will refer to unit wiring diagram. Take attention for: Humidifier and other components must interlock with fan motor. When the motor starts, then the humidifier can be activated; else after cut off the humidifier then can stop the fan motor;

If the unit's air discharge outlet and air duct are provided with electrical air damper, the air damper must cut in first before the motor operating. Else, the motor stop operating, then the air damper can close. It will ensure when the fan blower operates, the air damper of the duct is under normal condition.

Warning: All electrical components must comply with the safety grounding, no neutral grounding is allowed. Wrong wiring will lead to explosion, fire and body injure!

Warning: Must ensure the steam coil will close the steam valve before the fan blower stop operating!

Operation & Maintenance

- Before the unit operation, check the water pipe valves system and duct equipment. Make sure everything is under good condition
- Check the fan motor and blower moving parts regularly for their connection, operation and rotating direction. Readjust it if necessary.
- Washable primary filter should be washed either by clean water or detergent according to surrounding environment's cleanliness level.
- Medium filter should be changed or washed when the air flow resistance becomes double of that at the initial stage.
- During winter, coil water should be drained out if not operating. If the unit needs to operate during winter time, make sure when the unit stops running, the coil water must circle the system and the fresh air damper must be closed to prevent coil freezing. If the unit stops operation for a long duration, coil water must be drained out. Clean soft water must be used for chilled water and hot water system. Every two years, water chemical treatment must be performed to eliminate the contamination in the system and apply compressed air or water for cleaning the fin coil surface.

For more detail about installation, operation, maintenance and etc, please refer to the product catalogue.